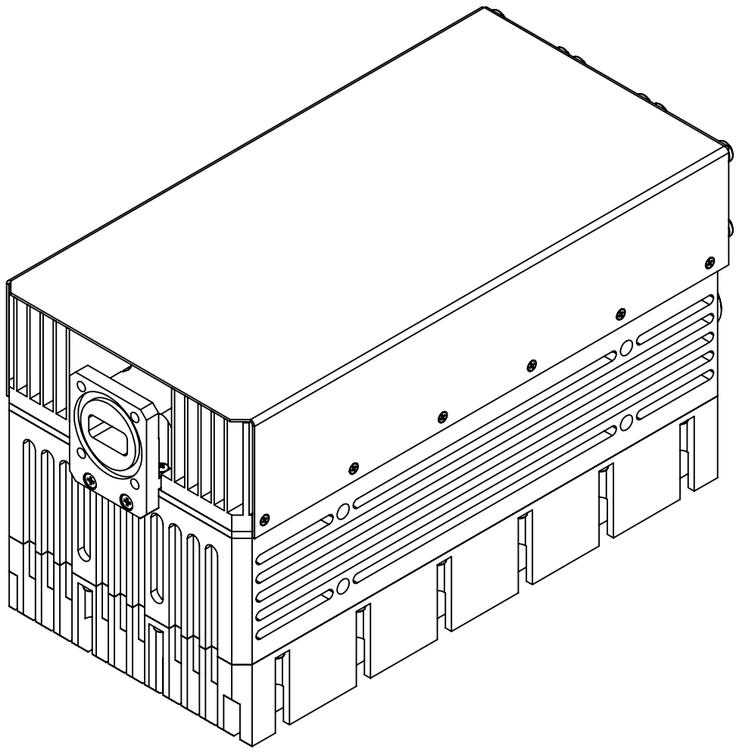

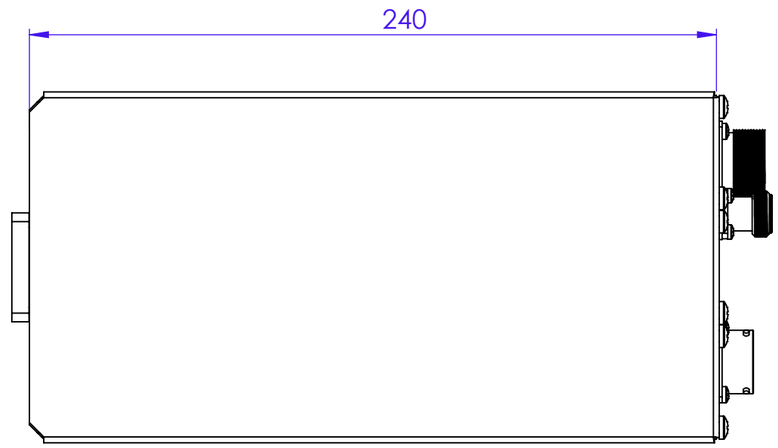
240

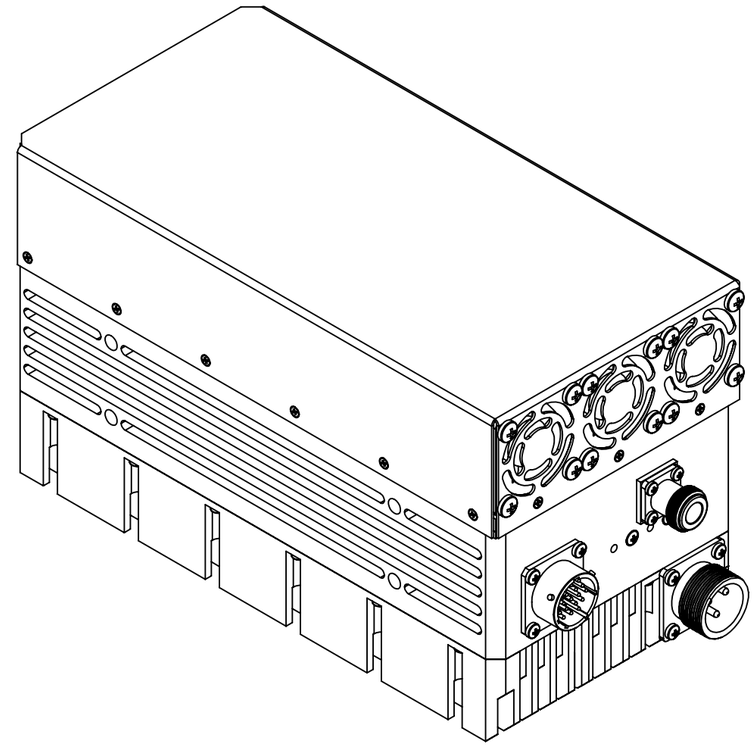

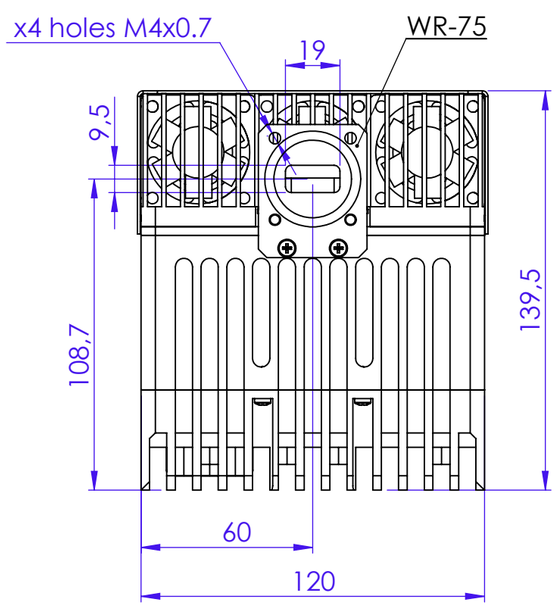
x4 holes M4x0.7
19
WR-75
9,5
108,7
139,5
60
120

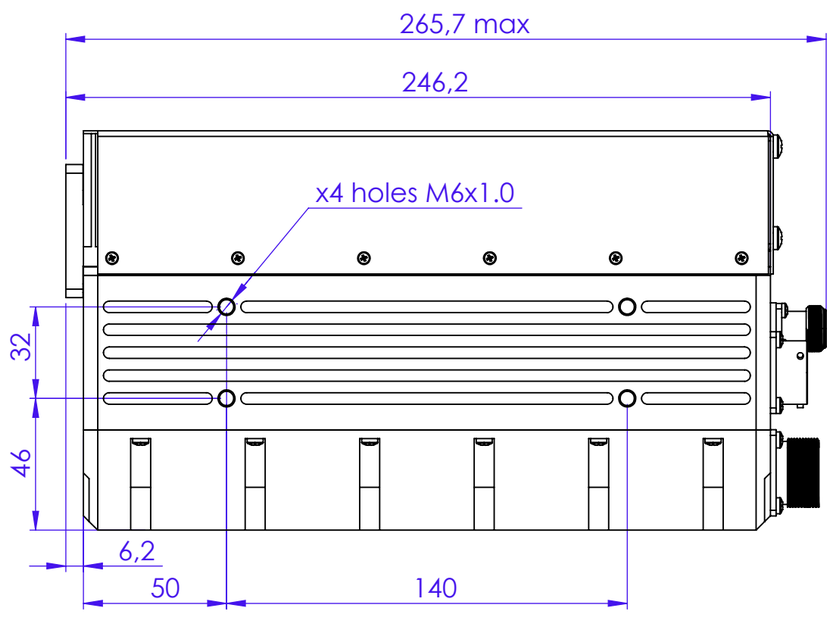
265,7 max
246,2
x4 holes M6x1.0
32
46
6,2
50
140

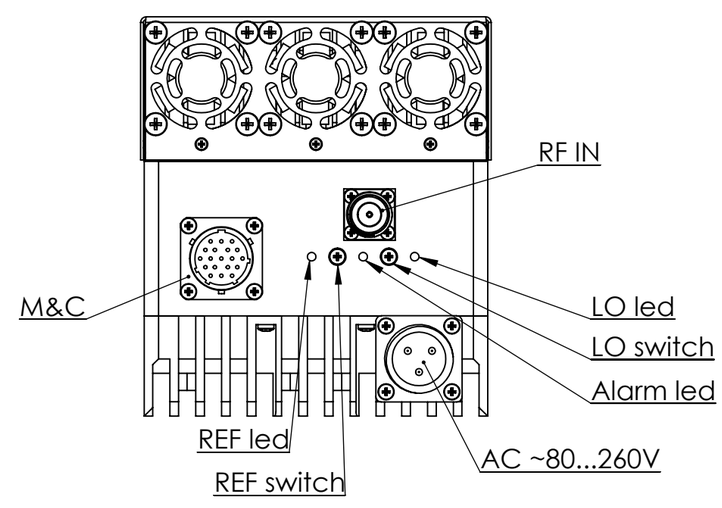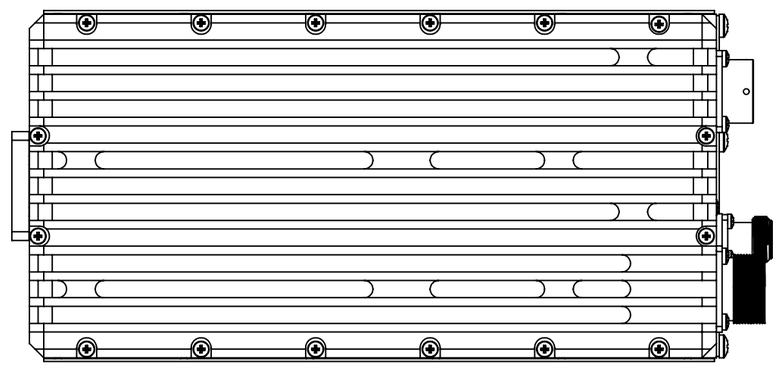
RF IN
M&C
LO led
LO switch
Alarm led
REF led
REF switch
AC ~80...260V